www.omnilens.in

GenNext

Reviva

Diffractive Multifocal Foldable Lens

A Better Way to
See the World...



OMNI Lens has introduced a new apodised diffractive multifocal foldable IOL called **Revive** which can provide a patient having cataract with an excellent depth of focus for the near, intermediate and distance vision and a high degree of spectacle independence in all light condition without compromising contrast sensitivity.

Advanced Optical Design

Revive is designed by using the most advance tools by a professional R&D team of optical and mechanical engineers. The optical diffractive apodized aspheric profile was developed using proprietary algorithms and the latest software. The height of the steps determines how the light coverage to the different focus. The lens is apodised and pupil independent and the height of each step decreases with increasing diameter. **In this way the apodisation helped distributing energy in favour of near vision when reading in bright light, and in favour of distance vision when driving at night.** The Revive Diffractive Multifocal Foldable Lens is manufactured from co-polymer acrylic material features an aberration correcting aspheric optic design. Negative aspheric characteristic of the IOL compensates spherical aberrations induced by cornea and guarantees optimal contrast sensitivity and maximum depth of focus. The diameter of its optic is 6.0mm. The central 3.00mm of the optics provides a near added power of +3.0D, which is equivalent to about +2.35D at the spectacle plane. The IOLs' total length is 12.5mm with elastic band haptic and it can be implanted with less than 2.2mm incision due to high pseudoplasticity of material.



Apodized Diffractive Optics

The diffractive steps are located in the 5mm central zone, suiting pupil sizes in various lighting conditions. The steps follow an apodization function, meaning they reduce in height according to an algorithm designed so the patient can function comfortably all day long.

The aspheric surface integrated with the diffractive profile is aberration correcting optic, which has been clinically proven to provide excellent vision in all conditions.

The state-of-art apodized diffractive surface provides visual functionality throughout the day:

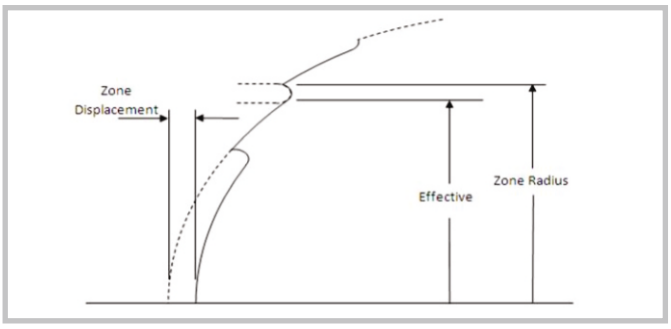

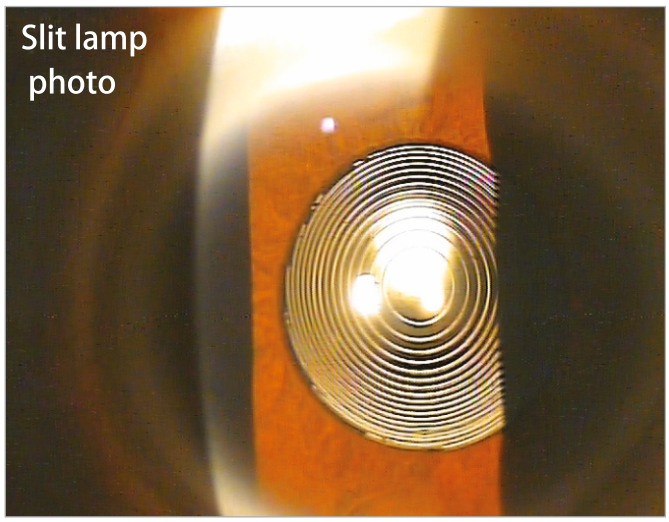

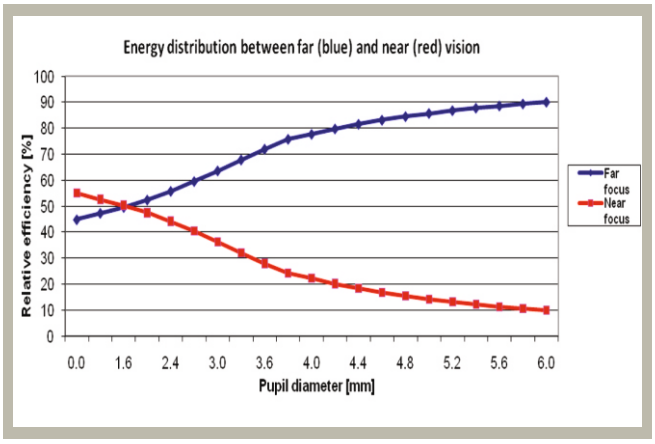

- In photopic conditions, when the pupil is small, the Revive Diffractive Multifocal Foldable Lens distributes 65% of the light for vision and 35% for near vision, providing light for all daytime activities.
- In mesopic and scotopic conditions, distance vision gets most of the light energy, enabling night vision and driving in the dark, when the pupil is enlarged.



- Revive Diffractive Multifocal Foldable Lens Provides quality vision for near, intermediate and far distance.
- Revive Diffractive Multifocal Foldable Lens reduces correcting spherical aberration to improve visual quality without compromising contrast sensitivity.
- Revive Diffractive Multifocal Foldable Lens improves vision in low light condition as well as in night.

Geometrical Design

- Revive Diffractive Multifocal Foldable Lens ensures excellent post operative stability and centration due elastic band haptic design.
- Elastic band haptic design lens behavior will be comparable to “3-piece” IOLs in large capsular bag & similar to “mono-block” IOLs within small capsular bag.
- 360° Square edge optic design to minimize the chance of PCO.

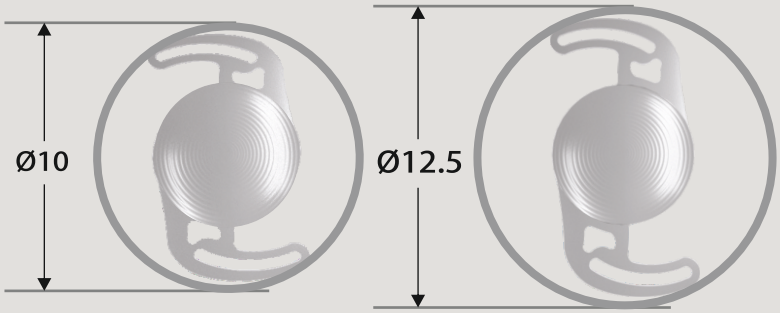

Bio-compatibility & Quality of Vision

The Revive Diffractive Multifocal Foldable Lens is made from unique copolymer **that combines hydrophilic and hydrophobic monomers** with long & successful track of intraocular biocompatibility:

HEMA- Hydroxyethylmethacrylate	**EOEMA**- Ethoxyethlmethacrylate
Hydrophilic Acrylic	Hydrophobic Acrylic
Excellent niocompatibility	Improve resistance and stability
Minimizes postoperative inflammation	Avoid rapid dehydration
Unfolding promptly and gently at any temperature	Avoids IOL tearing and marks
Great pseudoplasticity	High index of refraction

The distribution of the water content (the bulk at the lens surface) creates an anti-reflective interface in lens. This anti reflective results in a significant **reduction of glare and halos** associated with IOL implantation.

The Revive Diffractive Multifocal Foldable Lens material incorporates a violet filtering chromospheres for better protection of the retinal without compromising contrast sensitivity an depth of field.

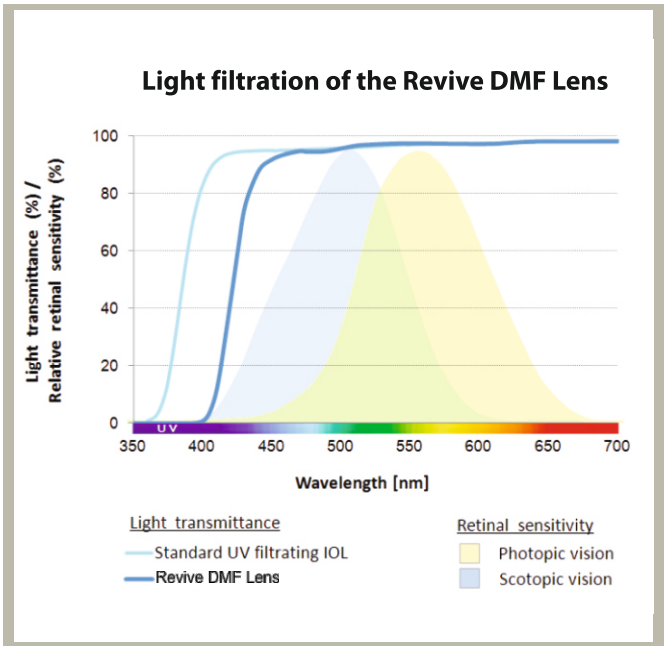

The Revive DMF Lens provides protection for the retina, by blocking light of wavelength below 440 nm

Advantage of Mini Incision Implantation

- Easily and safely injected through less than 2.4mm incision.
- Lowers surgically induced astigmatism.
- Less inflammation, fast recovery after surgery.
- Minimum trauma to the cornea and the eye.
- Less endothelial cell loss.



Technical Specification

Model No.	YSQFL600DF	YSQQ600DF
Optic Diameter (MM)	6.00 (±0.10 mm)	
Overall Diameter (MM)	12.50 ± (±0.20 mm)	11.00 ± (±0.20 mm)
Raw Material	Yellow Hydrophilic Acrylic (25% HA)	
Haptic Style	"Flex " Loop	"Quadra " Loop
Optic Style	Aspheric, Bifocal	
Haptic Angle	5°	
A constant (SRK T-Ultrasound Biometery)	118.0	
Diopter Range	(+) 8 to (+) 32 D	
Refractive Index	1.45-1.50	

Omni Lens

OMNI Lens is an Intraocular Lens manufacturer which is active in the global market since 1994. Omni Lens strategy focuses on technology ad innovative R&D, in order to keep the company as a dynamic leading player in the Medical Device Ophthalmic market. The Company hold high end technology to produce better optical surface & accurate power to ensure desire result. OMNI also guarantees safety and quality on a premium level for doctors and patients. The highest safety measures are used based on validated safety guidelines.



omni®
Revitalize the Vision

Rated NSIC-CRISIL SE 1A

An ISO 13485 Certified Company

CE 2460

EXPORT HOUSE Govt. Recognized

REGD. OFFICE:
OMNI LENS PVT.LTD. 5, "SAMRUDDHI", OPP. SAKAR-III, NAVRANGPURA, AHMEDABAD-380 014. (India)
Ph: +91-79-27544031-32 **E-mail:** info@omnilens.in **Website :** www.omnilens.in